SPECIFICATION APPLIED

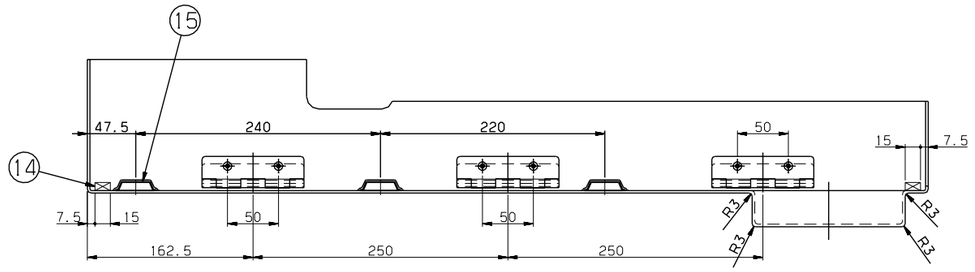

VIEW A-A

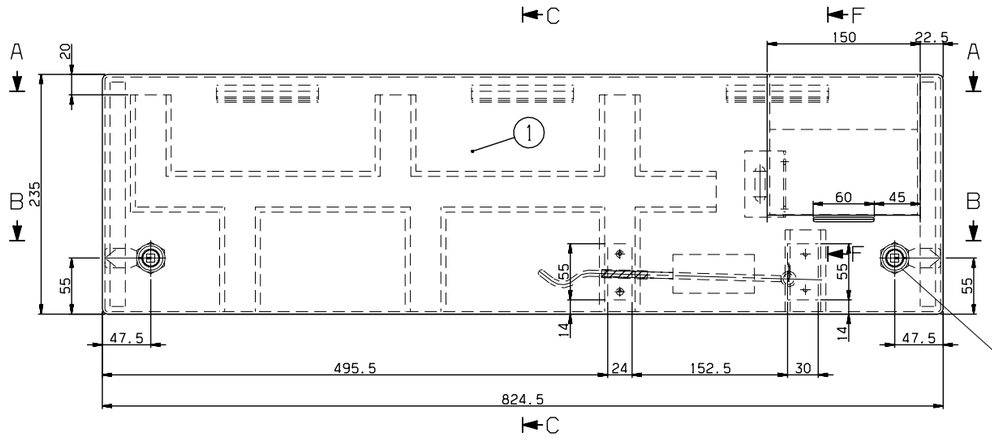

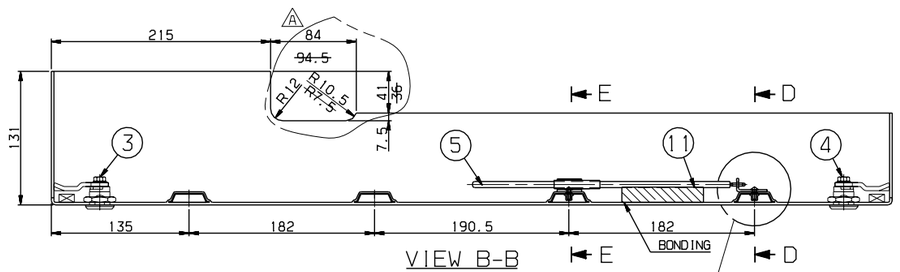

VIEW B-B

DETAIL #9
SCALE=1/1

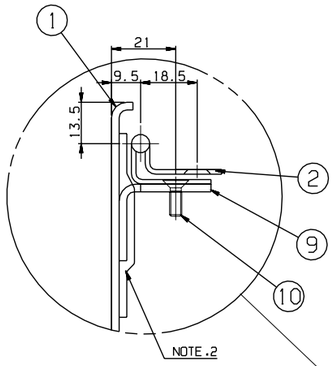

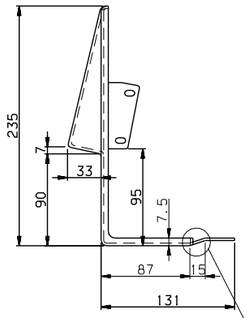

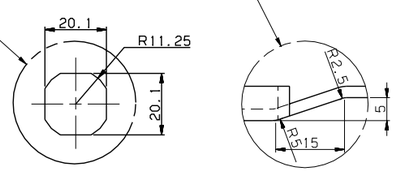

LATCH CUTTING HOLE

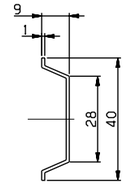

DETAIL #15
SCALE=1/1

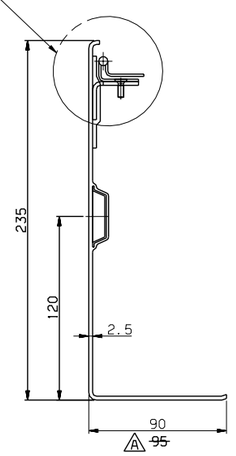

SECTION C-C

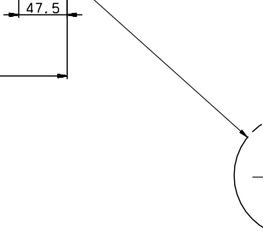

SECTION E-E
SCALE=1/1

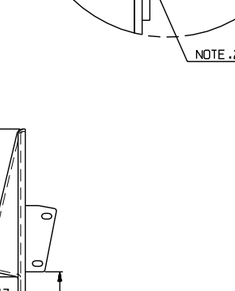

SECTION D-D
SCALE=1/1

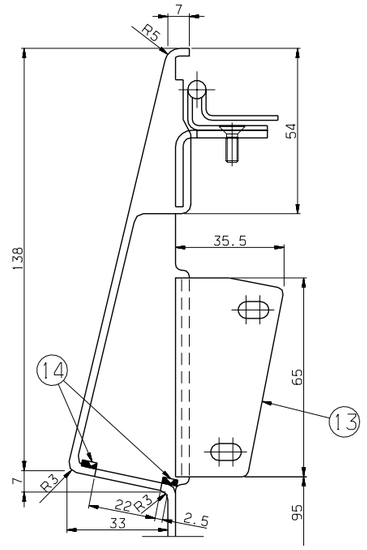

SECTION F-F
SCALE=1/1

NOTE
1. A INTERIOR PANEL'S COLOR AND SURFACE SHALL BE MANUFACTURED AFTER SAMPLE'S APPROVAL BY CUSTOMER.
2. PART 9 AND 13 SHALL BE SEALED WITH PART 1 AFTER INSTALLATION.

NO.	PART NO.	DESCRIPTION	MATERIAL	Q'TY	V.T	REMARKS
15	RFP55076AN0-015	STIFFENER	A1070BR	SET		1T
14	RFP55076AN0-014	PACKING	PE,FOAM	SET		T2X5
13	RFP55031AN0	BRACKET	ASSY	1		
12	RFP55076AN0-012	PACKING	EPDM FOAM	2		T8X15X225
11	RFP55076AN0-011	PAD.POLE	PE,FOAM	1		T15X22X80
10	RS60607-097S	SCREW F.H	SUS304	6		M4X12
9	RFP55076AN0-009	BRACKET	SUS304	3		
8	RFP55076AN0-008	NUTSERT	ASSY	4		9201B/M4/_Z,SPECIALINSERT
7	RS60610-066S	SCREW R.H	SUS304	4		M4X10
6	RFP55030AN0	POLE,CATCHER	ASSY	1		
5	RFP55029AN0	POLE,ASSY	ASSY	1		
4	RFP55028AN0-300	DEVICE,LOCKING	ASSY	1		
3	RFP55028AN0-301	DEVICE,LOCKING	ASSY	1		
2	RFP55027AN0	HINGE	ASSY	3		
1	RFP55076AN0-001	PANEL	FRP	1		

승인 APP	검도 CHK	설계 DGN
H.G.RYU 2009.05.02	H.S.KIM 2009.05.02	Y.D.KIM 2009.04.30

재질 MAT'L: ASSY
중량 G.W:
일본공시 MC | VO | CT: B | B | B
제도 DRG: S.H.SONG 2009.04.30
SIZE A1

명 칭 TITLE: COVER, INSIDE, TYPE E

도면 번호 DRG. NO: RFP55076AN0 MS | Ver. 00 | Rev. -A

SCALE 1/3 | 매수 SHEET 1 of 1

참고번호 REF. NO. FPP08367

HYUNDAI Rotem 현대로템주식회사

3D5101 | RFP- | 도-PRJT | 심리분숨 | CATIA

기호 MARK	일자 DATE	변경내역 DETAIL OF REVISION(E.C ZONE)	설변번호 E.C NO.	설계 DGN	검도 CHK	승인 APP
A	2009.12.10	CHANGED DIMENSION.	3D5101-U060	Y.D.KIM	H.S.KIM	H.G.RYU

치수허용차			
일반	~ 40	2	4
	~ 30	2	3
	~ 10	1	1.5
	< 3	0.5	1
절삭	~3150	-	7
	~1600	4	5
	~ 800	3	4
	~ 400	2	3
	~ 200	1.5	2
	~ 100	1	1.5

등급 GRADE	A	B
주조, 구조용 CASTING (±)		
~20M	8	14
~15M	7	12
~12M	6	10
~9M	5	8
~4M	4	6
~2M	3	4
~1M	2	3
~315	1	2
~120	1	2
~30	1	1

등급 GRADE	A	B	C
프레스 구조용 MOLDING (±)			
~20M	-	6.0	8.0
~15M	-	5.0	7.0
~12M	-	4.0	6.0
~8M	-	3.0	5.0
~4M	0.8	2.0	4.0
~2M	0.5	1.2	3.0
~1M	0.3	0.8	2.0
~315	0.2	0.5	1.2
~120	0.15	0.3	0.8
~30	0.1	0.2	0.5
3~6	0.05	0.1	0.2

등급 GRADE	A	B	C
기계 가공용 MACHINING (±)			
규정사항은 일반공시와 같습니다. GENERAL TOLERANCE			

본 도면은 당사 재산권으로 외부반출/배포 금지됨. PROPERTY OF ISSUING ENTITY, CANNOT BE DISTRIBUTED OR REPRODUCED WITHOUT AUTHORIZATION.